RAINBOW POOL PRODUCTS

Quality Pool & Spa Products

WATERCO PRESSURE PUMP 2002

(Also SWEEPMASTER 150)

SPARE PARTS DIAGRAM

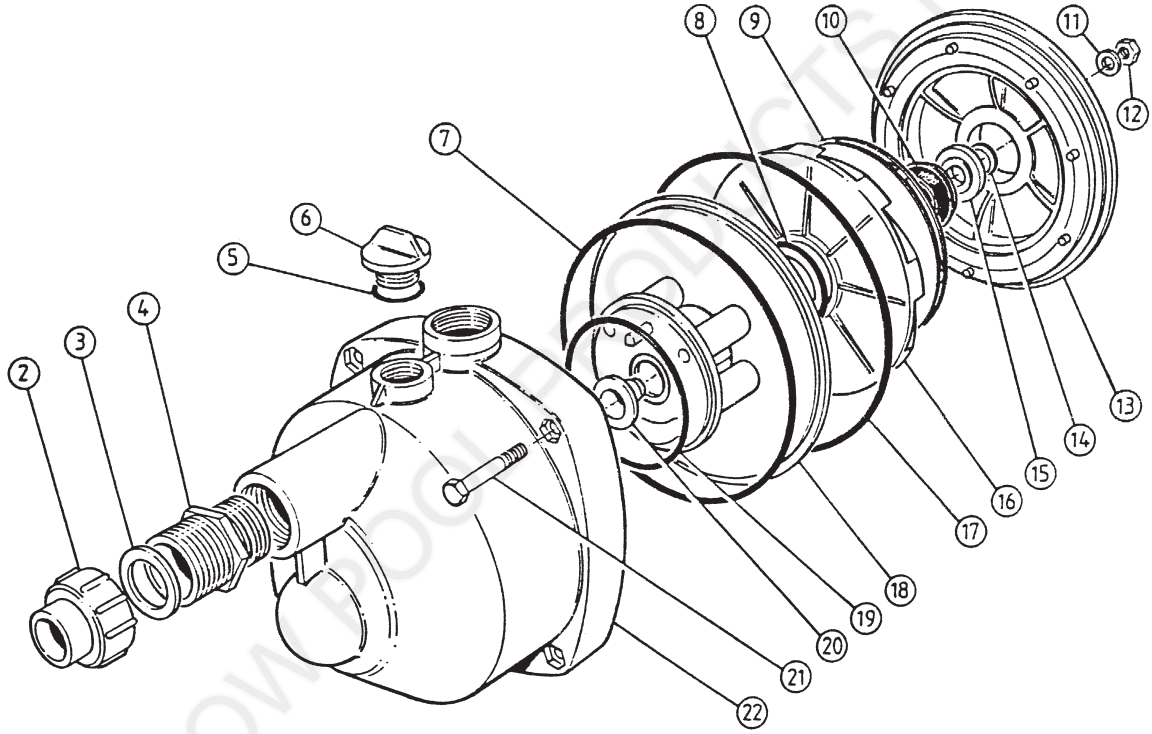

RAINBOW POOL PRODUCTS PTY LTD

Key	Description	Product Code
2	Barrel Union 40mm Black (Sweepmaster 150)	1222412
3	O ring Half Union 40mm	64479
4	Nipple (sweepmaster 150)	S132921
5	Priming Cap O ring	S1118511
6	Priming Cap	S120901
7	O ring (injector assy) Large	S1204611
8	O ring (injector assy) Small	S0614511
9	Impeller For Sweepmaster 150 (pre 2000)	S12863A1
9	Impeller For Pressure Pump 2002 And Sweepmaster 150	S12863A2
10	3/4 Mechanical Seal	S12148A
n/s	Motor For Pressure Pump 2002	6340275E
n/s	Motor For Sweepmaster 150 Only	6340275
11	Waher 11in Nut & Tail	S102651
12	Nut 8mm	63024
13	Adaptor Plate	S128341
14	Shim	S088513
15	Flinger For Sweepmaster 150 Only	S085851
16	Diffuser	S120741
17	Pump Body O ring	S1081211
18	Injector Assy	S12049A
19	O ring (injector assy) Medium	S1204511
20	Nozzle	S108201
21	Pump Face Bolt	S116086
22	Pump Face	S12165E1
n/s	40mm Barrel Union (pressure pump 2002)	122240
n/s	Male Valve Adaptor 40x25mm (2002 model only)	12243
n/s	Male Valve Adaptor 40x32mm (2002 model only)	12244
n/s	Brass Shim (set of 3)	S1228633
	Motor Bracket	6356001
n/s	Pump Foot Mk2	6350730
n/s	Barrel Union 25mm Brass Threaded	1222257
n/s	Automatic Pump Control PC-10	620225
	M8X60 Hexset SS304	63021

RAINBOW POOL PRODUCTS PTY LTD