SUPASTREAM

(Also AQUASWIM Series 40S)

(Product Code: 24530500, 24530750, 245301000, 245301250, 245301500)

SPARE PARTS DIAGRAM

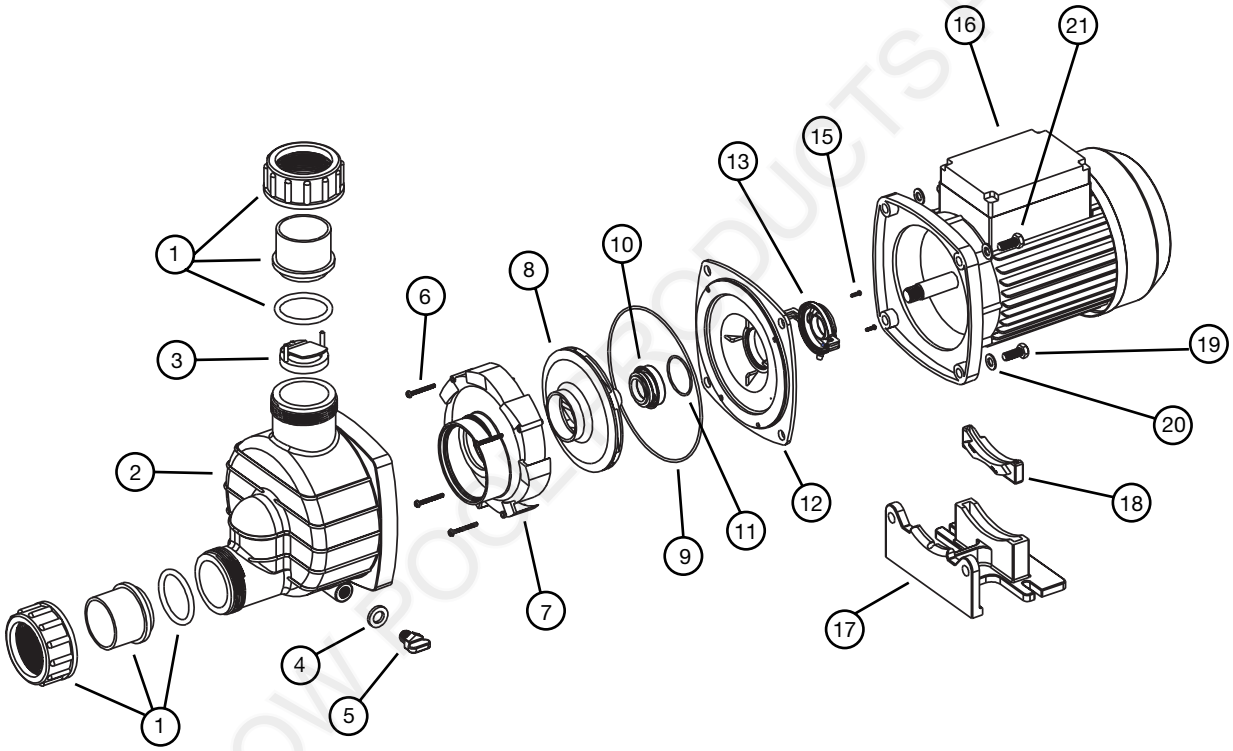

RAINBOW POOL PRODUCTS PTY LTD

Key	Description	Product Code
1	Half Union 40mm C/W O ring	122243B
1	O ring Half Union 40mm	64479
2	Pump Body	635079
3	Solar Check Valve	85517
4	Drain Plug Washer	S0808921
5	Drain Plug	63402302
7	Diffuser	638153
8	Impeller (Aquastream Solar 50)	63613892
8	Impeller (Aquastream Solar 75)	635096
8	Impeller (Aquastream Solar 100)	635097
8	Impeller (Aquastream Solar 125)	6350984
8	Impeller (Aquastream Solar 150)	635099
9	Pump Body O ring	S1226911
	Adapter Kit - Consists Of:	63506350
12	6350635 - Adapter Plate	
13	6340165 - Flange Protector Kit	
15	63400833 - Screws (2 required)	
10	6340162 - Mechanical Seal	
11	63813922 - O ring	
6	S1290816 - Screws M3 x 30 (4 required)	
16	Motor 1.17kW No Slinger Required (50-125)	6307245
16	Motor 1.68kW (150) No Slinger Required	635035L
17	Pump Foot (Aquastream Solar 50-125)	635072
	Pump Foot (Aquastream Solar 150)	6350720
18	Pump Foot Insert (Aquastream Solar 50-125)	635074
	Multi Pack M8 Bolts & Washers	63505321
19	2 x 6350540 (M8 x 40 bolt)	
20	4 x 6302180 (M8 washer)	
21	2 x 6350530 (M8 x 30 bolt)	
n/s	Motor End Shield (for 6307245A)	634047

RAINBOW POOL PRODUCTS PTY LTD